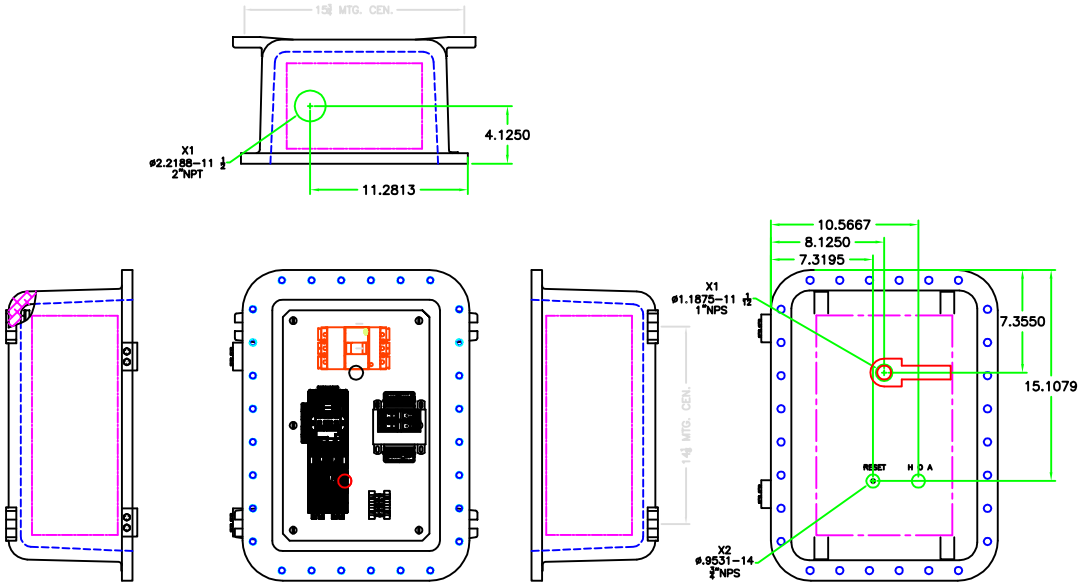

XCE 1218 COVER

BILL OF MATERIALS				
Item#	Qty.	Part #	Manufacturer	Description
1	1	XCE-121806-N4	ADALET	N7-9 EXPLOSION PROOF 12"X18"6"
2	1	XT1NU3150	ABB	150A ABB BREAKER
3	1	7201	ADALET	HANDLE LOCK PLATE
4	1	5211	ADALET	HANDLE ON/OFF TAG
5	1	XSM-1224	ADALET	121806 BACK PLATE
6	1	15559	ADALET	OPER HANDLE FOR TIN BREAKER
7	1	XHSS#3	ADALET	3 POS SEL. SWITCH
8	1	X4100PSF1	ABB	150VA CPT 480V/120V
9	2	ATQR1/2	FERRAZ	1/2AMP PRIMARY FUSES
10	1	TRM3	FERRAZ	3AMP SECONDARY FUSE
11	1	XRBL	ADALET	RESET
12	1	BT1A	ADALET	1-N.O/1-N.C.. CONTACT BLOCK
13	1	AF80N2-30-11-13	ABB	SZ 3 ABB CONT. 100-250V COIL
14	1	EF96-100	ABB	SZ 3 ABB O/L 36-100FLA
15	1	011836816	ABB	DINRAIL TERM. END PLATE
16	2	011511607	ABB	DINRAIL TERMINALS
17	2	020635116	ABB	DINRAIL STOPS
18	1	DINRAIL	ABB	DINRAIL 2"
19	2	XNP	ADALET	TAGS(1-HOA , 1-RESET)
20	1	XDB-2	ADALET	BREATHER/DRAIN

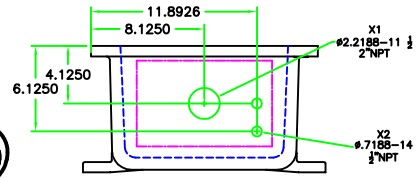

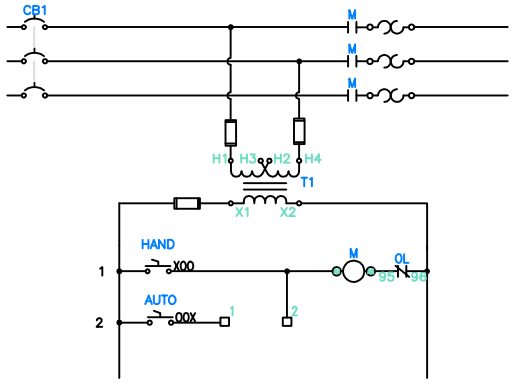

EXCO

EXCO INDUSTRIAL			
DRAWING NAME:	XP STANDARD SZ3 COMBO	BREAKER:	150AMP
DRAWN BY:	JUSTIN ISTRE	FLA:	65
DATE DRAWN:	6/28/2022	Hz.:	60
DRW.#:	XP-SZ3CB-XP121 806	VOLTAGE:	480
APPROVED BY:		HP.:	50
APPROVED DATE:		CONTROL VOLT	120